REV A - ADD INPUT CAPS, CHANGE TEMP PART change reg footprint, A/D en 0

REV B - remove Zener diodes and change pressure sens to .2-36psi

REV C - add SHDN to ANALOF EN 0 jumper

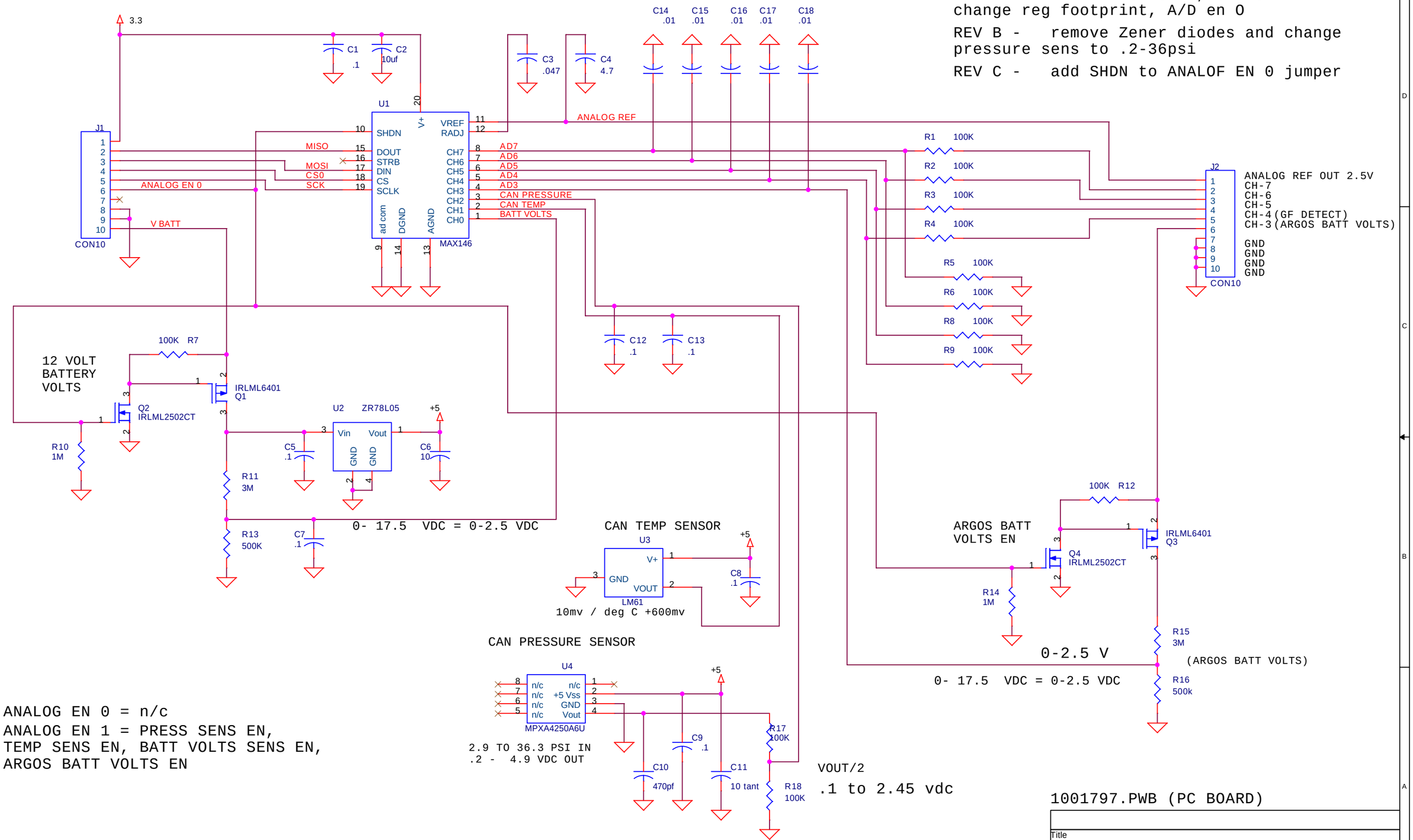

ANALOG EN 0 = n/c
ANALOG EN 1 = PRESS SENS EN, TEMP SENS EN, BATT VOLTS SENS EN, ARGOS BATT VOLTS EN

1001797.PWB (PC BOARD)

rev C 5/12/03

Title	OASIS3 ANALOG BOARD	
Size B	Document Number 1001796.SCH	Rev C
Date: Monday, May 12, 2003	Sheet 1 of 1	